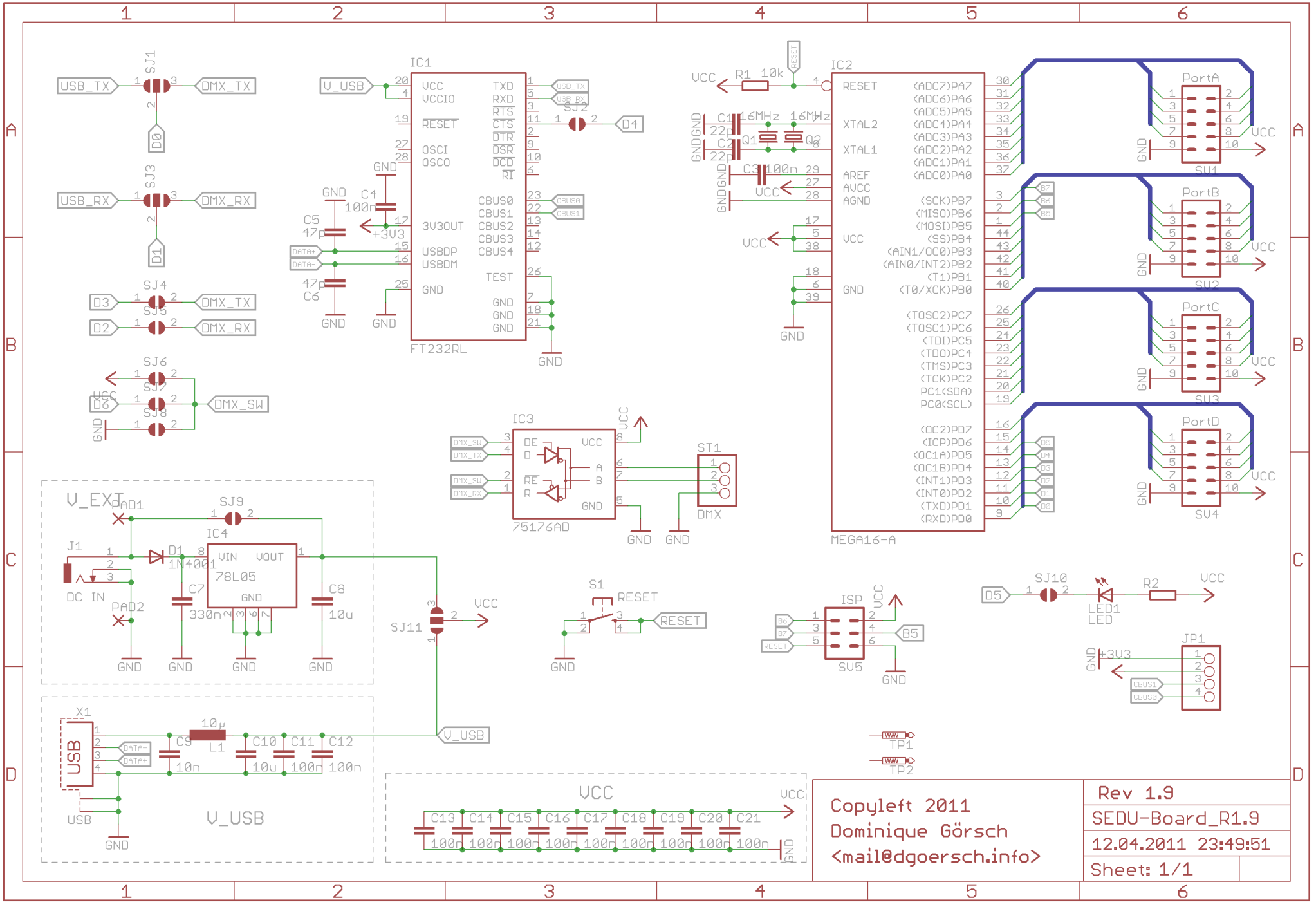

IC1
FT232RL
IC2
MEGA16-A
IC3
75176AD
IC4
78L05
V_EXT
V_USB
VCC
PortA
PortB
PortC
PortD
SU1
SU2
SU3
SU4
ST1
DMX
ISP
SV5
JP1
LED1
LED
X1
USB
DC IN
Copyleft 2011
Dominique Görsch
<mail@dgoersch.info>
Rev 1.9
SEDU-Board_R1.9
12.04.2011 23:49:51
Sheet: 1/1